ROBUS®

COMMERCIAL

SCHOLAR PLUS MULTIWATTAGE LED BATTEN

16/15/22/26W AND 18/22/27/31W, IP44



PRODUCT INFORMATION DOCUMENT

FEATURES

- Unique design allows each fitting to be switched between four wattages to suit needs of any application
- Multi-layer diffuser design to further improve light distribution and reduce glare
- UGR <19 complies with the requirements of EN12464 for reading, writing and computer based tasks in offices and other areas
- Suitable for surface or susepnded mounting using accessory 1m suspension kit
- Push-in twin terminals allowing easy loop-in/ loop-out
- Equipped with a low flicker driver
- Can be converted to emergency by our Emergency Conversions Unit department

CONSTRUCTION

- White powder coated pressed steel housing
- Polycarbonate/PMMA/PET multi-layer diffuser
- Polycarbonate end caps



Product Code:	RSCX4012-01	RSCX4015-01
Comparable to:	2x15W to 2x30W T8 fluorescent	2x18W to 2x36W T8 fluorescent
Total Power (W):	16.6/18.4/22.0/25.7	18.1/22.5/27.0/31.6
Power Factor:	0.9	0.9
Total Light Output (lm):	2040/2270/2700/3130	2380/2940/3490/4030
Total Emergency Light Output (lm):	NA	NA
Efficacy (lm/cctW):	124/123/123/122	131/131/129/128
Lux at 1m (lux):	920/1020/1220/1410	1110/1370/1630/1880
Emergency Lux at 1m (lux):	NA	NA
CCT (K):	4000	4000
CRI:	80	80
IP:	44	44
Operation Temperature (°C):	-20 ≤ Ta ≤ +40	-20 ≤ Ta ≤ +40
Inrush Current:	18A/158us	18A/158us
RG Value:	0	0
SDCM:	6	6
P_{ST} LM:	NA	NA
SVM:	NA	NA
Energy Class:	D	D
Rated Life to L70B50 (Hrs):	50000	50000
Dimensions LxWxH (mm):	1200x163x50	1500x163x50
Weight (kg):	2.94	3.45

Separate Control Gear Information		
Type of Light Source:	LED	LED
Full Load Efficiency (%):	93	92
P_{NET} (W):	NA	NA
Dimensions (mm):	190x31x21	190x31x21

Product is certified to all the relevant standards.
Please contact our technical department for market specific compliances.

PLEASE NOTE: INFORMATION IN THIS DOCUMENT MAY BE SUBJECT TO CHANGE WITHOUT PRIOR NOTICE

IRE: TEL: +353 1 709 9000 WEB: ROBUS.COM
UK: TEL: 0800 973 220 WEB: ROBUS.COM
AUS: TEL: +61 7 3890 5444 WEB: ROBUS.COM.AU
NZ: TEL: +64 03 668 5285 WEB: ROBUSLED.CO.NZ

LED GROUP EUROPE · UK · AUSTRALIA · NEW ZEALAND · ASIA · MIDDLE EAST · AFRICA

ROBUS®

COMMERCIAL

SCHOLAR PLUS MULTIWATTAGE LED BATTEN

16/15/22/26W AND 18/22/27/31W, IP44

Cone Illuminance Diagram

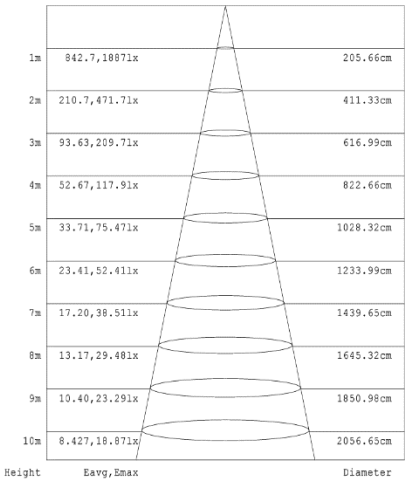

Diagram for RSCX4015-01 in 31W. Other diagrams available on request

Polar Intensity Diagram

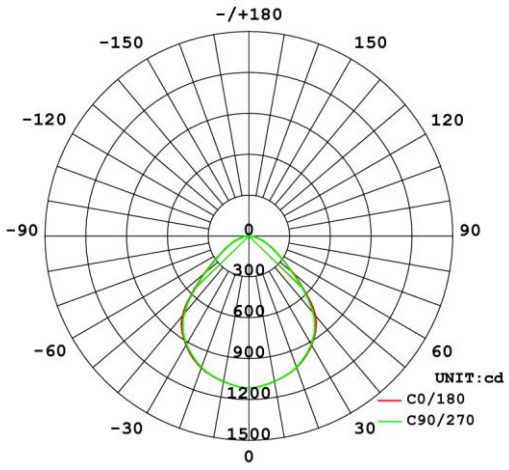

Diagram for RSCX4015-01 in 31W. Other diagrams available on request

Dimension Diagram

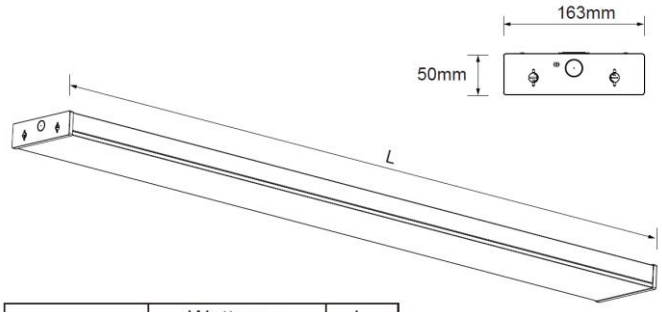

	Wattages	L
RSCX4012-01	16W/18W/22W/27W	1200mm
RSCX4015-01	18W/22W/27W/31W	1500mm

Accessories

RSCXSUS	SCHOLAR PLUS suspension kit accessory

Sensor Data

Time Off Delay:	NA
Illuminance Switching Range:	NA
Sensitivity Range (%):	NA
Mounting Height (max):	NA
Detection Zone Diameter (max):	NA

PLEASE NOTE: INFORMATION IN THIS DOCUMENT MAY BE SUBJECT TO CHANGE WITHOUT PRIOR NOTICE

IRE: TEL: +353 1 709 9000 WEB: ROBUS.COM
UK: TEL: 0800 973 220 WEB: ROBUS.COM
AUS: TEL: +61 7 3890 5444 WEB: ROBUS.COM.AU
NZ: TEL: +64 03 668 5285 WEB: ROBUSLED.CO.NZ

LED GROUP EUROPE · UK · AUSTRALIA · NEW ZEALAND · ASIA · MIDDLE EAST · AFRICA